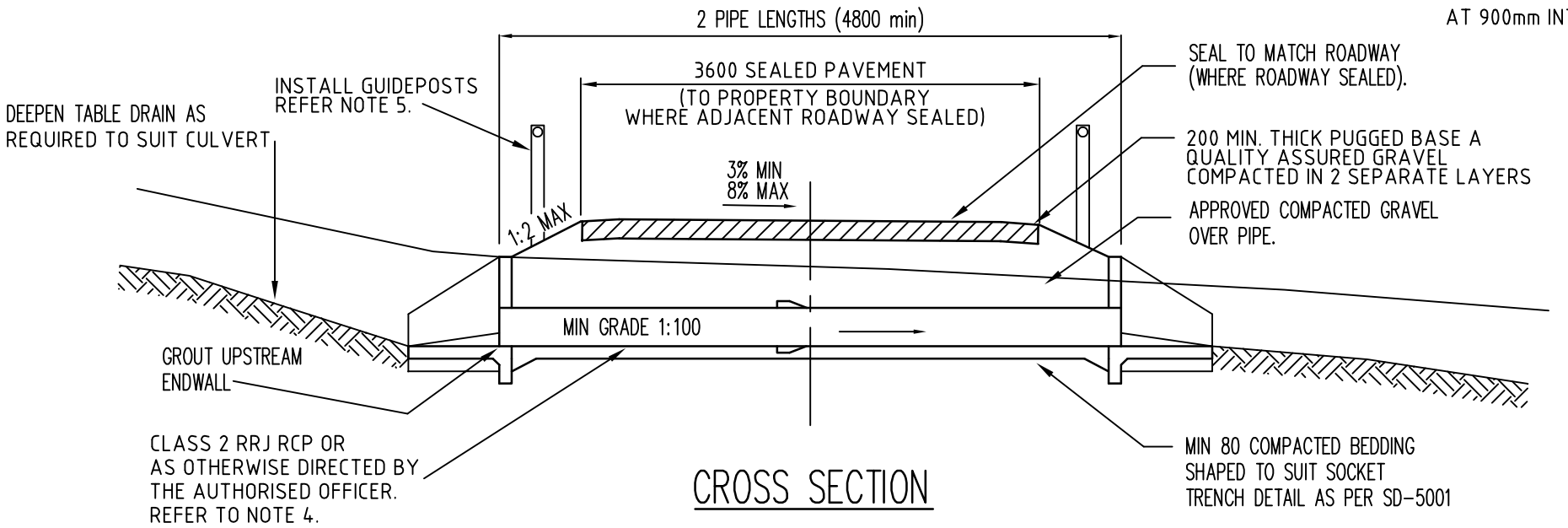


CROSS SECTION

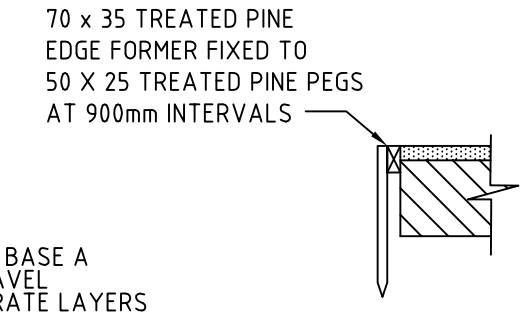


ASPHALT EDGE TREATMENT

## NOTES

1. ALL DIMENSIONS IN MILLIMETRES (mm).
2. PRECAST ENDWALL TO BE WINGED TYPE OR OTHER APPROVED TYPE (REFER SD-2060 - 2064).
3. SHALLOW DISH CROSSING MAY BE USED AS AN ALTERNATIVE, SUBJECT TO THE APPROVAL OF THE AUTHORISED OFFICER
4. MIN CLEAR COVER OVER DRIVEWAY CULVERTS SHALL BE:

| PIPE CLASS | MIN COVER |
|---|---|
| -CLASS 2 | 600 |
| -CLASS 3 | 400 |
| -CLASS 4 | 300 |

5. INSTALL GUIDEPOSTS AT CULVERT ENDS REFER SD-1013.
6. TIMBER FORMERS ARE TO REMAIN IN PLACE AFTER ASPHALT IS COMPACTED.

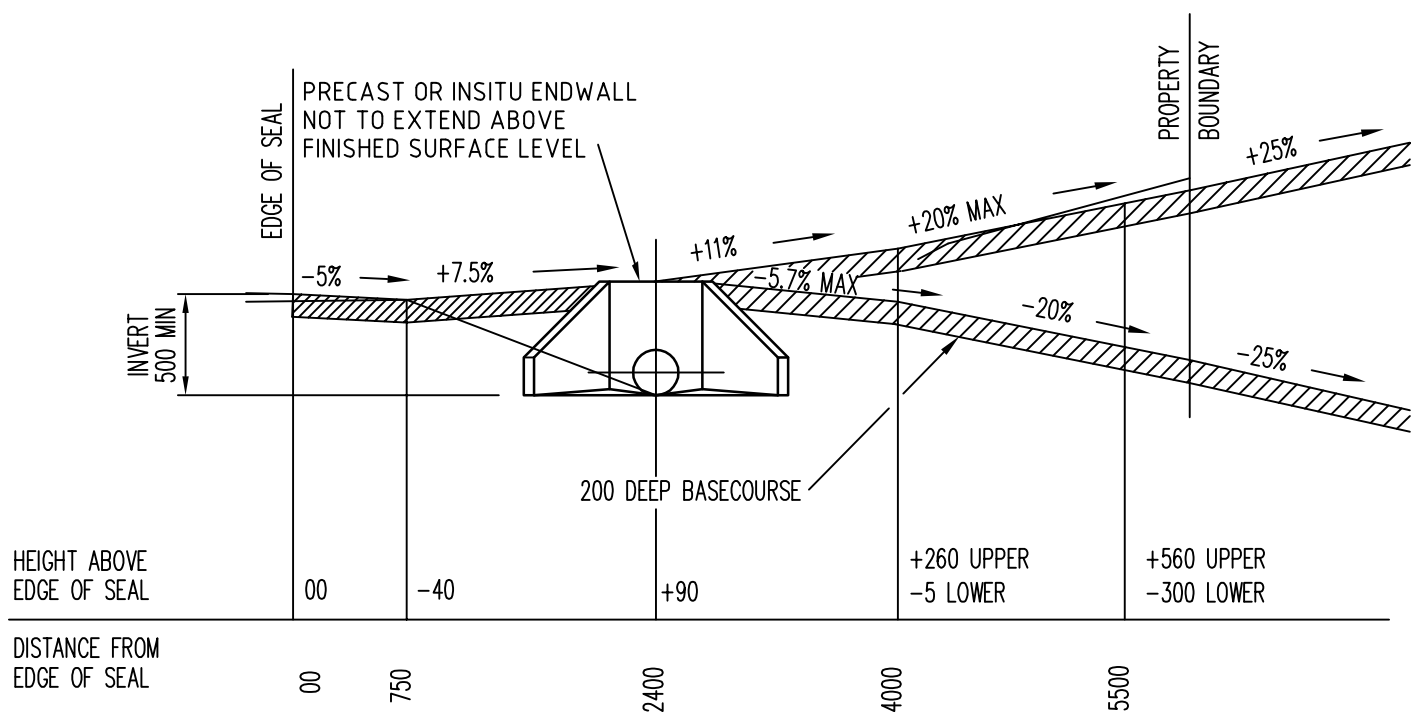


DRIVEWAY PROFILE

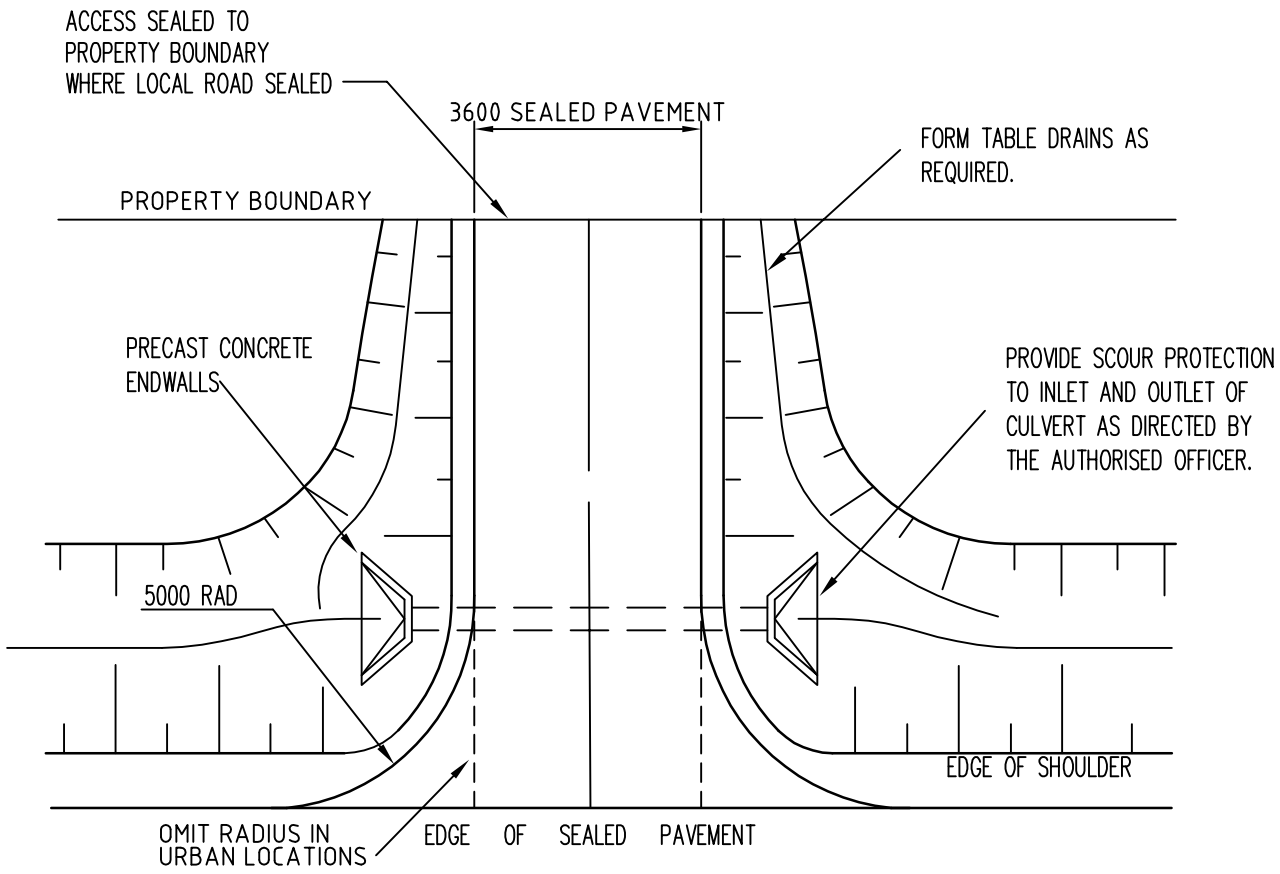


PLAN

| No. | AMENDMENT | APPR. | DATE |
|---|---|---|---|
| C | NMC REVISIONS | | 05/05 |
| B | DRAFTING REVISIONS | | 05/04 |
| A | REVIEW OF STANDARD DRAWING SET | | 01/03 |

INSTITUTE OF PUBLIC WORKS ENGINEERING AUSTRALIA
TASMANIA DIVISION Inc. - 2003 DISCLAIMER.
The authors and sponsoring organisations shall have no liability or responsibility to the user or any other person or entity with respect to any liability, loss or damage caused or alleged to be caused, directly or indirectly, by the adoption and use of these Standard Drawings including, but not limited to, any interruption of service, loss of business or anticipatory profits, or consequential damages resulting from the use of these Standard Drawings. Persons must not rely on these Standard Drawings as equivalent of, or a substitute for, project-specific design and assessment by an appropriately qualified professional.

INSTITUTE OF PUBLIC WORKS ENGINEERING AUSTRALIA TASMANIA DIVISION

DRAWING TITLE MUNICIPAL STANDARD DRAWING

# RURAL ROADS - STANDARD ACCESS

| SCALE | ISSUE DATE | APPROVED | DRAWING NO. |
|---|---|---|---|
| NOT TO SCALE | NOV. 1997 | | SD-1012 |