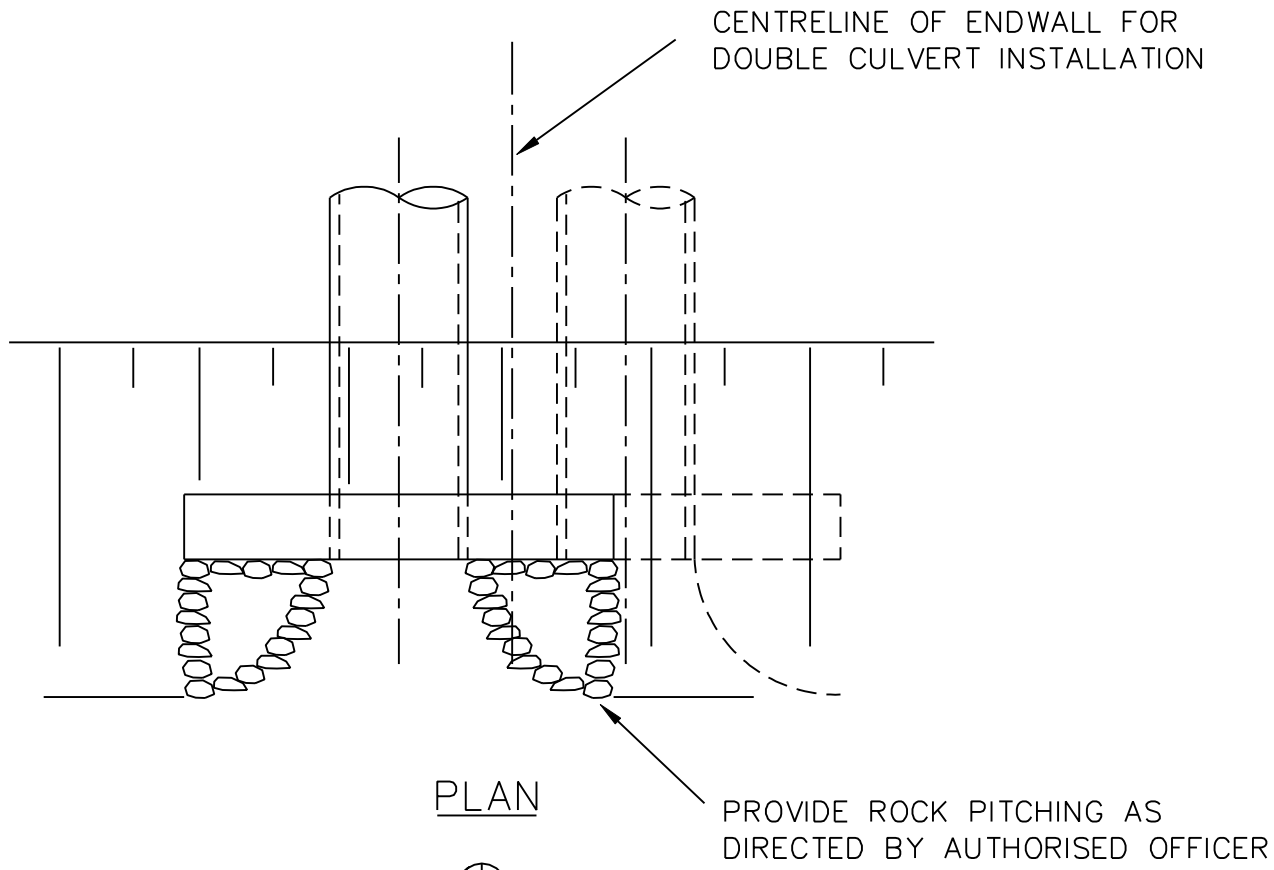

PLAN

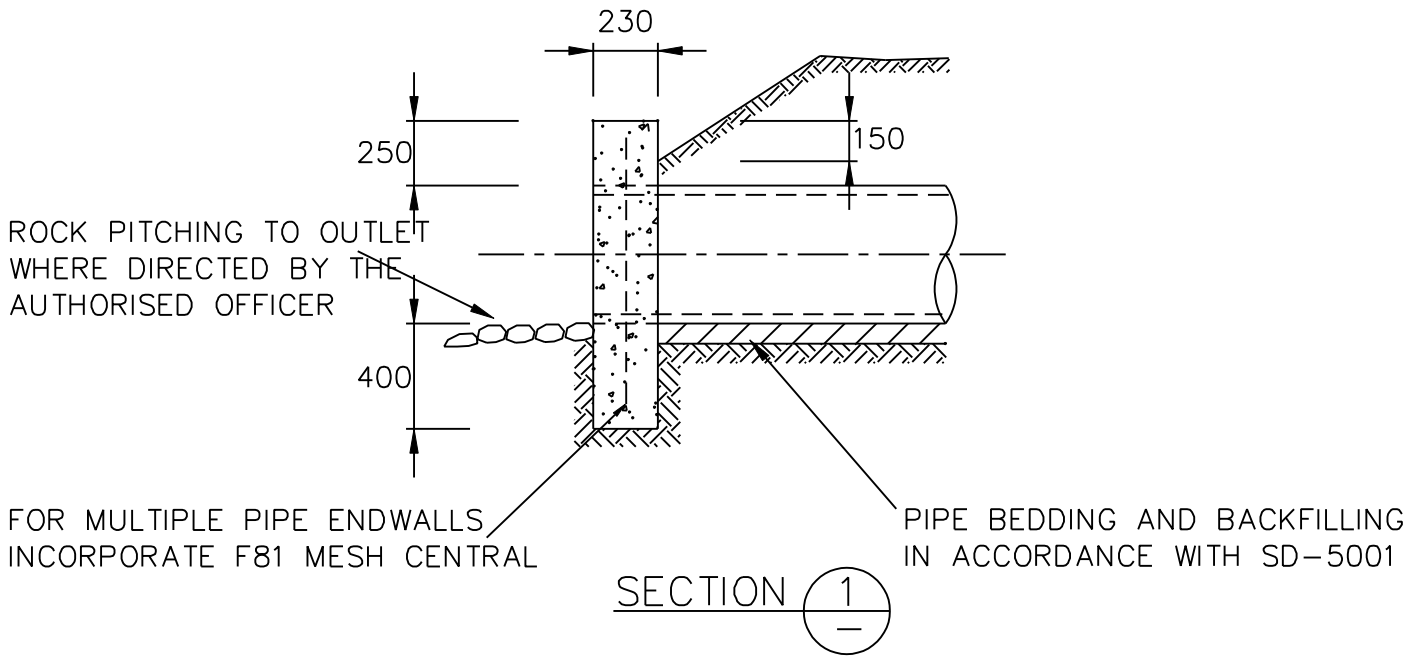

SECTION 1

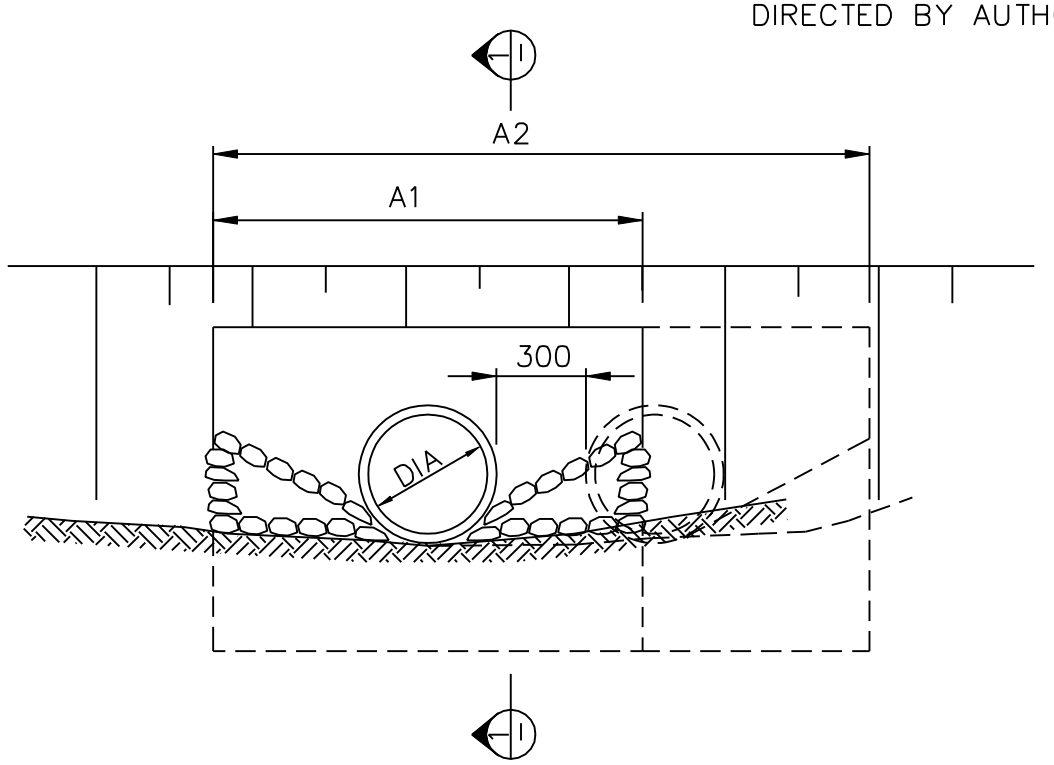

ELEVATION

NOM PIPE DIA	DIMENSION	
	A1	A2
300	1150	1850
375	1350	2100
450	1550	2400
525	1750	2650

NOTES

1. ALL DIMENSIONS IN MILLIMETRES (mm).
2. MINIMUM CONCRETE GRADE N20.
3. LAP REINFORCEMENT 300 MIN.
4. 50mm MINIMUM CLEAR COVER TO REO.

No.	Amendment	Appr.	Date
E			
D			
C			
B			
A	REVIEW OF STANDARD DRAWING SET		01/03

INSTITUTE OF PUBLIC WORKS ENGINEERING AUSTRALIA TASMANIA DIVISION Inc. – 2003 DISCLAIMER.
The authors and sponsoring organisations shall have no liability or responsibility to the user or any other person or entity with respect to any liability, loss or damage caused or alleged to be caused, directly or indirectly, by the adoption and use of these Standard Drawings including, but not limited to, any interruption of service, loss of business or anticipatory profits, or consequential damages resulting from the use of these Standard Drawings. Persons must not rely on these Standard Drawings as equivalent of, or a substitute for, project-specific design and assessment by an appropriately qualified professional.

INSTITUTE OF PUBLIC WORKS ENGINEERING AUSTRALIA TASMANIA DIVISION

Drawing Title: MUNICIPAL STANDARD DRAWING

STORMWATER – PLAIN CONCRETE ENDWALL (300 TO 525 DIA)

Scale	Issue Date	Approved	Drawing No.
NOT TO SCALE	NOV. 1997		SD–2063